Appliance Data Sheet



Product Type	**Refrigeration**
Product Code	**UBU60SLFE**
Product Description	
82cm Built Under Larder Fridge	

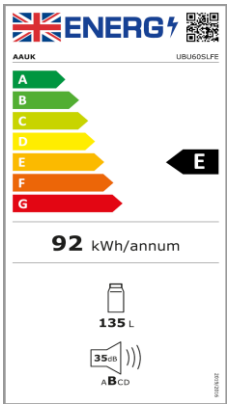

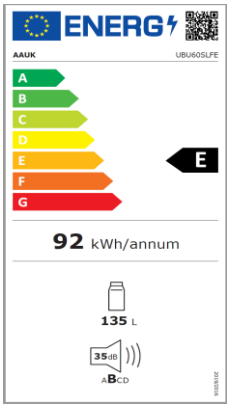

Features / Specification			
Barcode	8422248619370	**User Controls**	Electronic
Colour	White	**Display Colour**	White LED
Total Gross Capacity	135L	**Position of Controls**	Right Side of Compartment
Refrigeration System	Static	**Winter Setting**	-
Multiflow Air System	-	**Door Open Alarm**	Yes
Climate Class	ST	**Adjustable Feet**	Yes
Noise Level	35dB(A)	**Décor Door Fixing**	Fixed (Door-on-Door)
Reversible Doors	Yes	**Hinge Covers**	-
Fridge Compartment			
Fridge Capacity (net)	135L	**Glass Shelves**	2 + Crisper Cover
Defrost Type	Auto	**Door Shelves**	1 + Bottle Shelf
Fast Cooling	-	**Salad Crispers**	2
Internal Lighting	LED Side Light	**Shelf Décor Trims**	White
Metal Cooling	-	**Wine Rack**	-
Freezer Compartment			
Freezer Capacity (net)	-	**No. of Shelves**	-
Star Rating	-	**Freezer Drawers**	-
Defrost Type	-	**Freezer Compartments**	-
Fast Freeze	-	**Slide-Out Tray**	-
Freezer Shield	-	**Freezing Capacity**	-

Dimensions & Technical Information

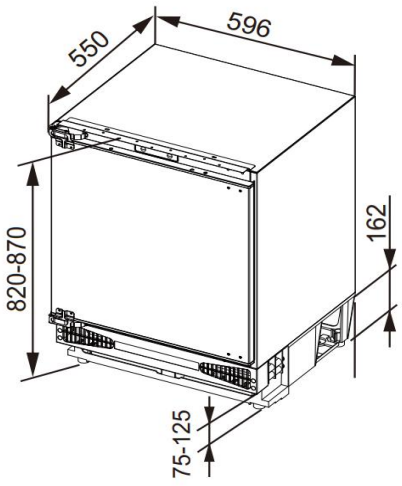

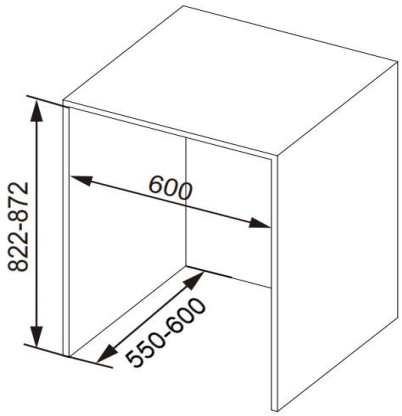

Product Dimensions (W x D x H)	596 x 550 x 820/870mm
Packed Dimensions (W x D x H)	616 x 566 x 880mm
Product Weight (kg)	31kg Packed / 28kg Unpacked
Cable / Plug	1.6m / UK 3 Pin
Rated Current	0.8A
Supply Connection	220-240V ~ 50Hz / 13A